BLACKBOX 850R
ELECTRONICS SET-UP SHEET

Voltage input:	2S - 6S LiPo
On resistance (Ω)	0.36
Continuous current (A)	150
Dimensions (mm)	56 x 46 x 37
Weight w/o wires & fan (g)	131
Motor limit	4S - 3000kV, 6S - 2400kV
BEC	6.0 - 7.4V / 5A

DRIVER: Brent Thielke **EVENT:** Alabama Manufacturer Shootout 11.0 **TRACK:** Cullman Agricultural Center **DATE:** 11/8/2020

VEHICLE: RC8B3.2e **CONDITIONS:** Indoors, dirt, large size, medium grip, dust **BATTERY:** #27354 Reedy Zappers SG3 5200mAh **TEMP:** 75F

ESC INFO

FIRMWARE:	C468212
WIRE SIZE:	Reedy 10 AWG

MOTOR POWER

4A TIMING LEVEL:	Level 0

MOTOR SETTINGS

MOTOR:	Reedy Sonic 866
KV RATING:	#27407 2100kV
ROTOR:	#27408 Standard
FDR/ROLLOUT:	14 / 46
TEMPERATURE:	145F

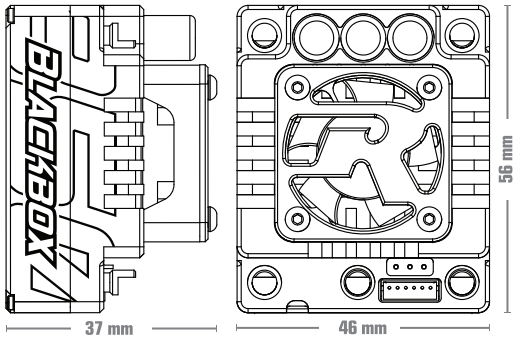

BRAKE

1A DRAG BRAKE:	0%
1B BRAKE STRGTH:	60%
1C INIT BRAKE:	0%
1D BRAKE FREQ:	3KHz
1E BRAKE PUNCH:	Level 1

MISC CONTROL

5A RUN MODE:	(•) F/B ( ) F/B/R
5B REVERSE PWR:	(•) 25% ( ) 50% ( ) 75% ( ) 100%
5C BATT CUTOFF:	( ) NONE (•) 3.2V/CELL ( ) 3.4V/CELL
5D ESC TEMP CUT:	(•) OFF ( ) 212F/100C
5E MOT ROTATION:	(•) NORMAL ( ) REVERSE
5F BEC VOLTAGE:	( ) 6.0V (•) 7.4V

NOTES:

THROTTLE

3A PUNCH CTRL:	Level 5
3B DRIVE FREQ:	12KHz
3C DEAD BAND:	6%

RADIO SETTINGS

THROTTLE EPA:	100%
BRAKE EPA:	95%
THROTTLE EXPO:	0%
BRAKE EXPO:	0%

www.ReedyPower.com

twitter.com/ReedyPower instagram.com/ReedyPower www.facebook.com/ReedyPower

REEDY POWERED